## EVALUATION REPORT

**FLORIDA BUILDING CODE, 9TH EDITION (2026)**

*Issued July 30, 2026*

**Manufacturer:** NOVATIK SRL
Str. 9 Mai, nr. 75, 105200
Baicoi, Prahova
Romania
www.novatik.us

**Manufacturing:** Baicoi, Prahova, Romania

**Quality Assurance:** PRI Construction Materials Technologies (QUA9110)

## SCOPE

**Category:** Roofing
**Subcategory:** Metal Roofing
**Code Edition:** Florida Building Code, 9th Edition (2026) including High-Velocity Hurricane Zones (HVHZ)
**Code Sections:** 1504.3.1, 1504.3.2, 1518.9, 1523.6.5.2.4
**Properties:** Wind Resistance

## REFERENCES

| Entity | Report No. | Standard | Year |
|---|---|---|---|
| PRI Construction Materials Technologies (TST5878) | 2591T0001 | TAS 100 | 2023 |
| PRI Construction Materials Technologies (TST5878) | 2591T0002 | UL 1897 | 2015 |
| | | UL 580 | 2006 |
| | | TAS 125 | 2003 |
| PRI Construction Materials Technologies (TST5878) | 2591T0003 | TAS 100 | 2023 |
| PRI Construction Materials Technologies (TST5878) | 2591T0004 | UL 1897 | 2015 |
| | | UL 580 | 2006 |
| | | TAS 125 | 2003 |
| PRI Construction Materials Technologies (TST5878) | 2591T0005 | ASTM B 117 | 2016 |
| PRI Construction Materials Technologies (TST5878) | 2591T0006 | ASTM G 155 | 2021 |
| PRI Construction Materials Technologies (TST5878) | 2591T0010 | ASTM B 117 | 2016 |
| PRI Construction Materials Technologies (TST5878) | 2591T0011 | ASTM G 155 | 2021 |



This evaluation report is provided for State of Florida product approval under Rule 61G20-3. The manufacturer shall notify CREEK Technical Services, LLC of any product changes or quality assurance changes throughout the duration for which this report is valid. This evaluation report does not express nor imply warranty, installation, recommended use, or other product attributes that are not specifically addressed herein.

## PRODUCT DESCRIPTIONS

**Panel:** NATURA ROMAN
**Description:** Through fastened, preformed, stone coated steel panels; Maximum 370mm x 1270mm coverage
**Material:** 26ga. (min. 0.45mm) DX51 DIN EN 10346 Zn-Mg coated steel ($F_y$ = min. 55 ksi)

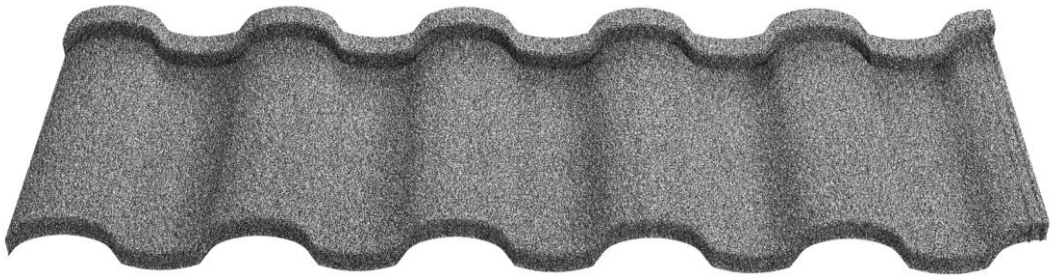

**Panel:** NATURA CLASSIC
**Description:** Through fastened, preformed, stone coated steel panels; Maximum 370mm x 1260mm coverage
**Material:** 26ga. (min. 0.45mm) DX51 DIN EN 10346 Zn-Mg coated steel ($F_y$ = min. 55 ksi)

**Panel:** NATURA SLATE
**Description:** Through fastened, preformed, stone coated steel panels; Maximum 370mm x 1225mm coverage
**Material:** 26ga. (min. 0.45mm) DX51 DIN EN 10346 Zn-Mg coated steel ($F_y$ = min. 55 ksi)

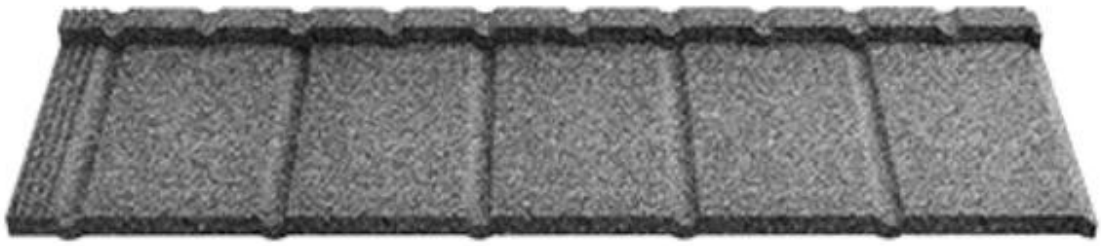



This evaluation report is provided for State of Florida product approval under Rule 61G20-3. The manufacturer shall notify CREEK Technical Services, LLC of any product changes or quality assurance changes throughout the duration for which this report is valid. This evaluation report does not express nor imply warranty, installation, recommended use, or other product attributes that are not specifically addressed herein.

## APPROVED ASSEMBLIES

| System 1A: Direct-to-Deck for NATURA ROMAN, CLASSIC or SLATE Panels | | | |
|---|---|---|---|
| Slope: | Shall be in accordance with the FBC. | | |
| Roof Deck: | Solid or closely fitted min. 15/32-inch, 32/16 span rated, 4-ply, CDX plywood sheathing for new and existing construction at max. 24-inch span; In the HVHZ, new construction shall be min. 19/32-inch, 40/20 span rated, CDX plywood at max. 24-inch span; Designed by others in accordance with FBC requirements. | | |
| Underlayment: | Installed in accordance with the FBC. | | |
| Attachment: | Fasten using #10-13 x min. 2-inch pancake head screws attached along the back flange of the panel and #12 x min. 2.5-inch WoodZIP SCAMP screws installed at the vertical leg of the overlap and angled into the deck; Fasteners shall penetrate the deck a minimum 3/8-inch and shall be corrosion resistant in accordance with section 1507.4.4 and 1506.6. | | |
| | Natura Roman Pattern<br>See Appendix A for **"10 screws per panel"** | Natura Slate Pattern<br>See Appendix A for **"10 screws per panel"** | Natura Classic Pattern<br>See Appendix A for **"14 screws per panel"** |
| Maximum Design Pressures: | **-97.25 psf**<br>*Pressure calculated using 2:1 margin of safety per 1504.9* | | |

**Maximum Mean Roof Heights**
Slopes 2:12 – 12:12

| Exposure | Basic Wind Speed (mph) | | | | | | | | |
|---|---|---|---|---|---|---|---|---|---|
| | ≤120 | 130 | 140 | 150 | 160 | 170 | 180 | 190 | 200 |
| Zone 1 for Gable/Hip Roofs | | | | | | | | | |
| B | 60 ft | 60 ft | 60 ft | 60 ft | 60 ft | 60 ft | 60 ft | 60 ft | 60 ft |
| C | 60 ft | 60 ft | 60 ft | 60 ft | 60 ft | 60 ft | 42 ft | 25 ft | 15 ft |
| D | 60 ft | 60 ft | 60 ft | 60 ft | 60 ft | 32 ft | 16 ft | NA | NA |
| Zone 2 for Gable Roofs and Zones 2 & 3 for Hip Roofs | | | | | | | | | |
| B | 60 ft | 60 ft | 60 ft | 60 ft | 60 ft | 60 ft | 52 ft | 34 ft | 23 ft |
| C | 60 ft | 60 ft | 60 ft | 60 ft | 34 ft | 19 ft | NA | NA | NA |
| D | 60 ft | 60 ft | 60 ft | 27 ft | NA | NA | NA | NA | NA |
| Zone 3 for Gable Roofs | | | | | | | | | |
| B | 60 ft | 60 ft | 60 ft | 60 ft | 45 ft | 28 ft | 18 ft | NA | NA |
| C | 60 ft | 60 ft | 33 ft | 17 ft | NA | NA | NA | NA | NA |
| D | 60 ft | 29 ft | NA | NA | NA | NA | NA | NA | NA |

Notes: 1) Exposure category for the structure location shall be as defined in the Florida Building Code 2) Limitations are based on an effective wind area of $10ft^2$ or less 3) Topographic factors such as escarpments or hills are not included in the above assessment 4) Applicable for Enclosed Buildings without overhangs 5) NA = "Not Allowed" 6) $K_d = 0.85$ 7) $K_e = 1.0$ 8) Projects with mean roof heights of greater than 60 ft shall be evaluated by a licensed design professional 9) See page 7 for details for dimensions and locales of Zone 1, 2, and 3 10) $V_{ult}$ is shown in the tables above. Design wind loads are calculated using $V_{asd} = V_{ult}\sqrt{0.6}$ per 1609.3.1.



This evaluation report is provided for State of Florida product approval under Rule 61G20-3. The manufacturer shall notify CREEK Technical Services, LLC of any product changes or quality assurance changes throughout the duration for which this report is valid. This evaluation report does not express nor imply warranty, installation, recommended use, or other product attributes that are not specifically addressed herein.

## System 1B: Direct-to-Deck for NATURA ROMAN, SLATE or CLASSIC Panels

| | | | |
|---|---|---|---|
| Slope: | Shall be in accordance with the FBC. | | |
| Roof Deck: | Solid or closely fitted min. 15/32-inch, 32/16 span rated, 4-ply, CDX plywood sheathing for new and existing construction at max. 24-inch span; In the HVHZ, new construction shall be min. 19/32-inch, 40/20 span rated, CDX plywood at max. 24-inch span; Designed by others in accordance with FBC requirements. | | |
| Underlayment: | Installed in accordance with the FBC. | | |
| Attachment: | Fasten using #12 x min. 2.5-inch WoodZIP SCAMP screws attached along the back flange of the panel and #12 x min. 1-inch Impax SD3 HWH stitch screws (panel-to-panel connection) installed at the vertical leg of the overlap; Fasteners shall penetrate the deck a minimum 3/8-inch and shall be corrosion resistant in accordance with section 1507.4.4 and 1506.6. | | |
| | Natura Roman Pattern<br>See Appendix A for **"20 screws per panel"** | Natura Slate Pattern<br>See Appendix A for **"20 screws per panel"** | Natura Classic Pattern<br>See Appendix A for **"28 screws per panel"** |
| Maximum Design Pressures: | **-146 psf**<br>*Pressure calculated using 2:1 margin of safety per 1504.9* | | |

**Maximum Mean Roof Heights**
Slopes 2:12 – 12:12

| Exposure | Basic Wind Speed (mph) | | | | | | | | |
|---|---|---|---|---|---|---|---|---|---|
| | ≤120 | 130 | 140 | 150 | 160 | 170 | 180 | 190 | 200 |
| Zone 1 for Gable/Hip Roofs | | | | | | | | | |
| B | 60 ft | 60 ft | 60 ft | 60 ft | 60 ft | 60 ft | 60 ft | 60 ft | 60 ft |
| C | 60 ft | 60 ft | 60 ft | 60 ft | 60 ft | 60 ft | 60 ft | 60 ft | 60 ft |
| D | 60 ft | 60 ft | 60 ft | 60 ft | 60 ft | 60 ft | 60 ft | 60 ft | 51 ft |
| Zone 2 for Gable Roofs and Zones 2 & 3 for Hip Roofs | | | | | | | | | |
| B | 60 ft | 60 ft | 60 ft | 60 ft | 60 ft | 60 ft | 60 ft | 60 ft | 60 ft |
| C | 60 ft | 60 ft | 60 ft | 60 ft | 60 ft | 60 ft | 60 ft | 47 ft | 28 ft |
| D | 60 ft | 60 ft | 60 ft | 60 ft | 60 ft | 60 ft | 34 ft | 18 ft | NA |
| Zone 3 for Gable Roofs | | | | | | | | | |
| B | 60 ft | 60 ft | 60 ft | 60 ft | 60 ft | 60 ft | 60 ft | 57 ft | 39 ft |
| C | 60 ft | 60 ft | 60 ft | 60 ft | 60 ft | 37 ft | 21 ft | NA | NA |
| D | 60 ft | 60 ft | 60 ft | 59 ft | 28 ft | NA | NA | NA | NA |

Notes: 1) Exposure category for the structure location shall be as defined in the Florida Building Code 2) Limitations are based on an effective wind area of $10ft^2$ or less 3) Topographic factors such as escarpments or hills are not included in the above assessment 4) Applicable for Enclosed Buildings without overhangs 5) NA = "Not Allowed" 6) $K_d$ = 0.85 7) $K_e$ = 1.0 8) Projects with mean roof heights of greater than 60 ft shall be evaluated by a licensed design professional 9) See page 7 for details for dimensions and locales of Zone 1, 2, and 3 10) $V_{ult}$ is shown in the tables above. Design wind loads are calculated using $V_{asd} = V_{ult}\sqrt{0.6}$ per 1609.3.1.



This evaluation report is provided for State of Florida product approval under Rule 61G20-3. The manufacturer shall notify CREEK Technical Services, LLC of any product changes or quality assurance changes throughout the duration for which this report is valid. This evaluation report does not express nor imply warranty, installation, recommended use, or other product attributes that are not specifically addressed herein.

## System 2A: Batten for NATURA ROMAN, SLATE or CLASSIC Panels

| | | | |
|---|---|---|---|
| Slope: | Shall be in accordance with the FBC. | | |
| Roof Deck: | Solid or closely fitted min. 15/32-inch, 32/16 span rated, 4-ply, CDX plywood sheathing for new and existing construction at max. 24-inch span; In the HVHZ, new construction shall be min. 19/32-inch, 40/20 span rated, CDX plywood at max. 24-inch span; Designed by others in accordance with FBC requirements. | | |
| Underlayment: | Installed in accordance with the FBC. | | |
| Batten: | No. 2 SYP, nominal 2x2 dimensional lumber installed 14.5-inch o.c. parallel to the eave using #10 x min. 3.5-inch bugle head wood screws spaced 12-inches o.c. with every other fastener at each rafter/truss intersection. | | |
| Attachment: | Fasten using #10-13 x min. 2-inch pancake head screws attached along the back flange of the panel and #12 x min. 2.5-inch WoodZIP SCAMP screws installed at the vertical leg of the overlap and angled into the batten; Fasteners shall penetrate the deck a minimum 3/8-inch and shall be corrosion resistant in accordance with section 1507.4.4 and 1506.6. | | |
| | Natura Roman Pattern<br>See Appendix A for **"10 screws per panel"** | Natura Slate Pattern<br>See Appendix A for **"10 screws per panel"** | Natura Classic Pattern<br>See Appendix A for **"14 screws per panel"** |
| Maximum Design Pressures: | **-131psf**<br>*Pressure calculated using 2:1 margin of safety per 1504.9* | | |

**Maximum Mean Roof Heights**
Slopes 2:12 - 12:12

| Exposure | Basic Wind Speed (mph) | | | | | | | | |
|---|---|---|---|---|---|---|---|---|---|
| | ≤120 | 130 | 140 | 150 | 160 | 170 | 180 | 190 | 200 |
| Zone 1 for Gable/Hip Roofs | | | | | | | | | |
| B | 60 ft | 60 ft | 60 ft | 60 ft | 60 ft | 60 ft | 60 ft | 60 ft | 60 ft |
| C | 60 ft | 60 ft | 60 ft | 60 ft | 60 ft | 60 ft | 60 ft | 60 ft | 60 ft |
| D | 60 ft | 60 ft | 60 ft | 60 ft | 60 ft | 60 ft | 60 ft | 49 ft | 27 ft |
| Zone 2 for Gable Roofs and Zones 2 & 3 for Hip Roofs | | | | | | | | | |
| B | 60 ft | 60 ft | 60 ft | 60 ft | 60 ft | 60 ft | 60 ft | 60 ft | 60 ft |
| C | 60 ft | 60 ft | 60 ft | 60 ft | 60 ft | 60 ft | 47 ft | 27 ft | 16 ft |
| D | 60 ft | 60 ft | 60 ft | 60 ft | 60 ft | 36 ft | 18 ft | NA | NA |
| Zone 3 for Gable Roofs | | | | | | | | | |
| B | 60 ft | 60 ft | 60 ft | 60 ft | 60 ft | 60 ft | 57 ft | 38 ft | 26 ft |
| C | 60 ft | 60 ft | 60 ft | 60 ft | 39 ft | 21 ft | NA | NA | NA |
| D | 60 ft | 60 ft | 60 ft | 31 ft | 15 ft | NA | NA | NA | NA |

Notes: 1) Exposure category for the structure location shall be as defined in the Florida Building Code 2) Limitations are based on an effective wind area of $10ft^2$ or less 3) Topographic factors such as escarpments or hills are not included in the above assessment 4) Applicable for Enclosed Buildings without overhangs 5) NA = "Not Allowed" 6) $K_d$ = 0.85 7) $K_e$ = 1.0 8) Projects with mean roof heights of greater than 60 ft shall be evaluated by a licensed design professional 9) See page 7 for details for dimensions and locales of Zone 1, 2, and 3 10) $V_{ult}$ is shown in the tables above. Design wind loads are calculated using $V_{asd} = V_{ult}\sqrt{0.6}$ per 1609.3.1.



This evaluation report is provided for State of Florida product approval under Rule 61G20-3. The manufacturer shall notify CREEK Technical Services, LLC of any product changes or quality assurance changes throughout the duration for which this report is valid. This evaluation report does not express nor imply warranty, installation, recommended use, or other product attributes that are not specifically addressed herein.

| **System 2B: Batten for NATURA ROMAN, SLATE or CLASSIC Panels** | | | |
|---|---|---|---|
| Slope: | Shall be in accordance with the FBC. | | |
| Roof Deck: | Solid or closely fitted min. 15/32-inch, 32/16 span rated, 4-ply, CDX plywood sheathing for new and existing construction at max. 24-inch span; In the HVHZ, new construction shall be min. 19/32-inch, 40/20 span rated, CDX plywood at max. 24-inch span; Designed by others in accordance with FBC requirements. | | |
| Underlayment: | Installed in accordance with the FBC. | | |
| Batten: | No. 2 SYP, nominal 2x2 dimensional lumber installed 14.5-inch o.c. parallel to the eave using #10 x min. 3.5-inch bugle head wood screws spaced 12-inches o.c. with every other fastener at each rafter/truss intersection. | | |
| Attachment: | Fasten using #10-13 x min. 2-inch pancake head screws attached along the back flange of the panel and #12 x min. 2.5-inch WoodZIP SCAMP screws installed at the vertical leg of the overlap and angled into the batten; Fasteners shall penetrate the deck a minimum 3/8-inch and shall be corrosion resistant in accordance with section 1507.4.4 and 1506.6. | | |
| | Natura Roman Pattern<br>See Appendix A for **"15 screws per panel"** | Natura Slate Pattern<br>See Appendix A for **"15 screws per panel"** | Natura Classic Pattern<br>See Appendix A for **"21 screws per panel"** |
| Maximum Design Pressures: | **-146 psf**<br>*Pressure calculated using 2:1 margin of safety per 1504.9* | | |

**Maximum Mean Roof Heights**
Slopes 2:12 – 12:12

| Exposure | Basic Wind Speed (mph) | | | | | | | | |
|---|---|---|---|---|---|---|---|---|---|
| | ≤120 | 130 | 140 | 150 | 160 | 170 | 180 | 190 | 200 |
| Zone 1 for Gable/Hip Roofs | | | | | | | | | |
| B | 60 ft | 60 ft | 60 ft | 60 ft | 60 ft | 60 ft | 60 ft | 60 ft | 60 ft |
| C | 60 ft | 60 ft | 60 ft | 60 ft | 60 ft | 60 ft | 60 ft | 60 ft | 60 ft |
| D | 60 ft | 60 ft | 60 ft | 60 ft | 60 ft | 60 ft | 60 ft | 60 ft | 51 ft |
| Zone 2 for Gable Roofs and Zones 2 & 3 for Hip Roofs | | | | | | | | | |
| B | 60 ft | 60 ft | 60 ft | 60 ft | 60 ft | 60 ft | 60 ft | 60 ft | 60 ft |
| C | 60 ft | 60 ft | 60 ft | 60 ft | 60 ft | 60 ft | 60 ft | 47 ft | 28 ft |
| D | 60 ft | 60 ft | 60 ft | 60 ft | 60 ft | 60 ft | 34 ft | 18 ft | NA |
| Zone 3 for Gable Roofs | | | | | | | | | |
| B | 60 ft | 60 ft | 60 ft | 60 ft | 60 ft | 60 ft | 60 ft | 57 ft | 39 ft |
| C | 60 ft | 60 ft | 60 ft | 60 ft | 60 ft | 37 ft | 21 ft | NA | NA |
| D | 60 ft | 60 ft | 60 ft | 59 ft | 28 ft | NA | NA | NA | NA |

Notes: 1) Exposure category for the structure location shall be as defined in the Florida Building Code 2) Limitations are based on an effective wind area of $10ft^2$ or less 3) Topographic factors such as escarpments or hills are not included in the above assessment 4) Applicable for Enclosed Buildings without overhangs 5) NA = "Not Allowed" 6) $K_d = 0.85$ 7) $K_e = 1.0$ 8) Projects with mean roof heights of greater than 60 ft shall be evaluated by a licensed design professional 9) See page 7 for details for dimensions and locales of Zone 1, 2, and 3 10) $V_{ult}$ is shown in the tables above. Design wind loads are calculated using $V_{asd} = V_{ult}\sqrt{0.6}$ per 1609.3.1.



This evaluation report is provided for State of Florida product approval under Rule 61G20-3. The manufacturer shall notify CREEK Technical Services, LLC of any product changes or quality assurance changes throughout the duration for which this report is valid. This evaluation report does not express nor imply warranty, installation, recommended use, or other product attributes that are not specifically addressed herein.

| Gable Roofs | | Hip Roofs |
|---|---|---|
| Slopes 2:12 to 6.1:12 | Slopes >6.1:12 to 12:12 | Slopes 2:12 to 12:12 |
| 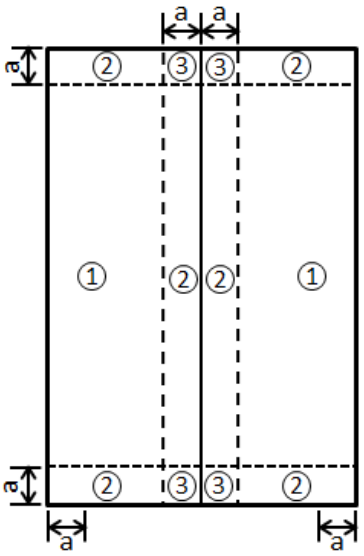 | 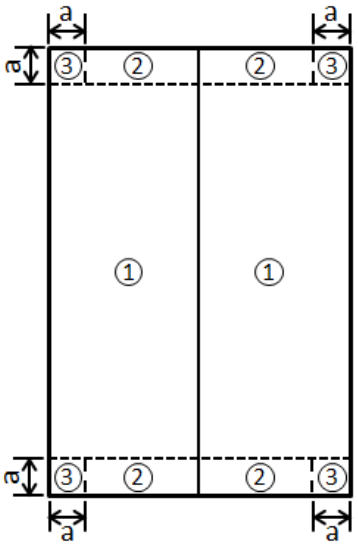 | 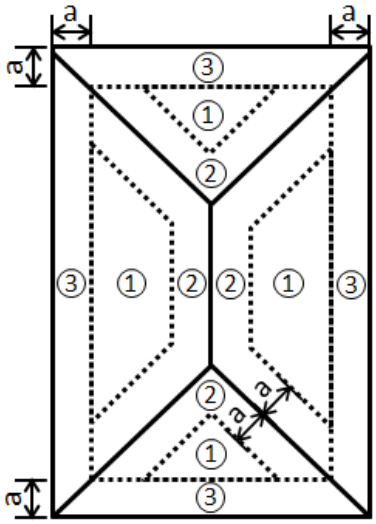 |

Dimension “a” shall be 10% of the least horizontal dimension or (0.4 x *Mean Roof Height)*, whichever is smaller, but not less than either 4% of the least horizontal dimension or 3ft.

## LIMITATIONS

1. Fire classification is not within the scope of this evaluation.
2. The roof deck and the roof deck attachment shall be designed by others to meet the minimum design loads established for components and cladding and in accordance with FBC requirements.
3. Reroofing shall be in accordance with FBC Section 1511 outside the HVHZ and Section 1521 inside the HVHZ.
4. Installation of the evaluated products shall comply with this report, the FBC and the manufacturer’s published application instructions. Where discrepancies exist between these sources, the more restrictive and FBC compliant installation detail shall prevail.
5. Materials shall conform to FBC Section 1711 as well as FBC Section 1506 outside of the HVHZ and FBC Section 1517 within the HVHZ.
6. FBC Section 1504.3.1.1 is not within the scope of this evaluation. Compliance with FBC Section 1504.3.1.1 shall be established through other *approved* products.
7. All products listed in this report shall be manufactured under a quality assurance program in compliance with Rule 61G20-3.



This evaluation report is provided for State of Florida product approval under Rule 61G20-3. The manufacturer shall notify CREEK Technical Services, LLC of any product changes or quality assurance changes throughout the duration for which this report is valid. This evaluation report does not express nor imply warranty, installation, recommended use, or other product attributes that are not specifically addressed herein.

## COMPLIANCE STATEMENT

This report has been prepared in accordance with F.A.C. Rule 61G20-3.

**This item has been digitally signed and sealed by Zachary R. Priest, PE, on 7/30/2026.**

**Printed copies of this document are not considered signed and sealed and the signature must be verified on any electronic copies.**

Digitally signed by Zachary R. Priest

2026.07.30
11:49:06
-04'00'

Zachary R. Priest, P.E.
Florida Registration No. 74021
Organization No. ANE9641

## CERTIFICATION OF INDEPENDENCE

CREEK Technical Services, LLC does not have, nor will it acquire, a financial interest in any company manufacturing or distributing products under this evaluation.

CREEK Technical Services, LLC is not owned, operated, or controlled by any company manufacturing or distributing products under this evaluation.

Zachary R. Priest, P.E. does not have, nor will acquire, a financial interest in any company manufacturing or distributing products under this evaluation.

Zachary R. Priest, P.E. does not have, nor will acquire, a financial interest in any other entity involved in the approval process of the product.

## APPENDICES

APPENDIX A – Fastening Patterns (5 pages)



This evaluation report is provided for State of Florida product approval under Rule 61G20-3. The manufacturer shall notify CREEK Technical Services, LLC of any product changes or quality assurance changes throughout the duration for which this report is valid. This evaluation report does not express nor imply warranty, installation, recommended use, or other product attributes that are not specifically addressed herein.

## Fastening Patterns

### NATURA ROMAN

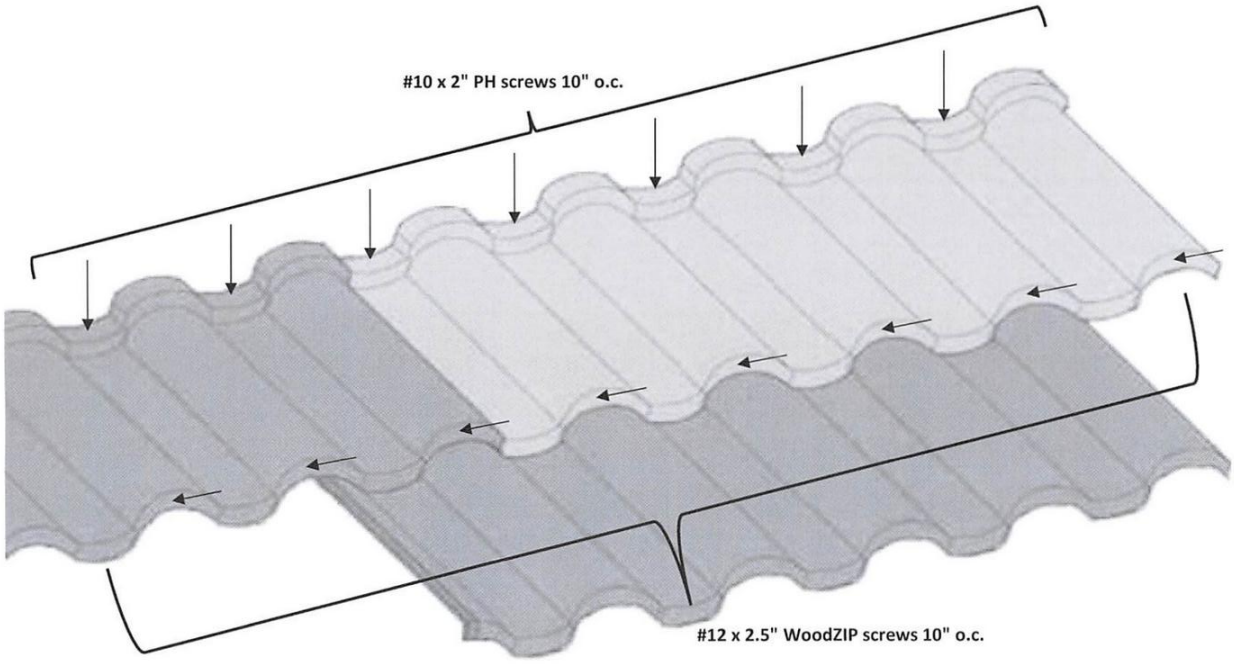


"10 screws per panel"

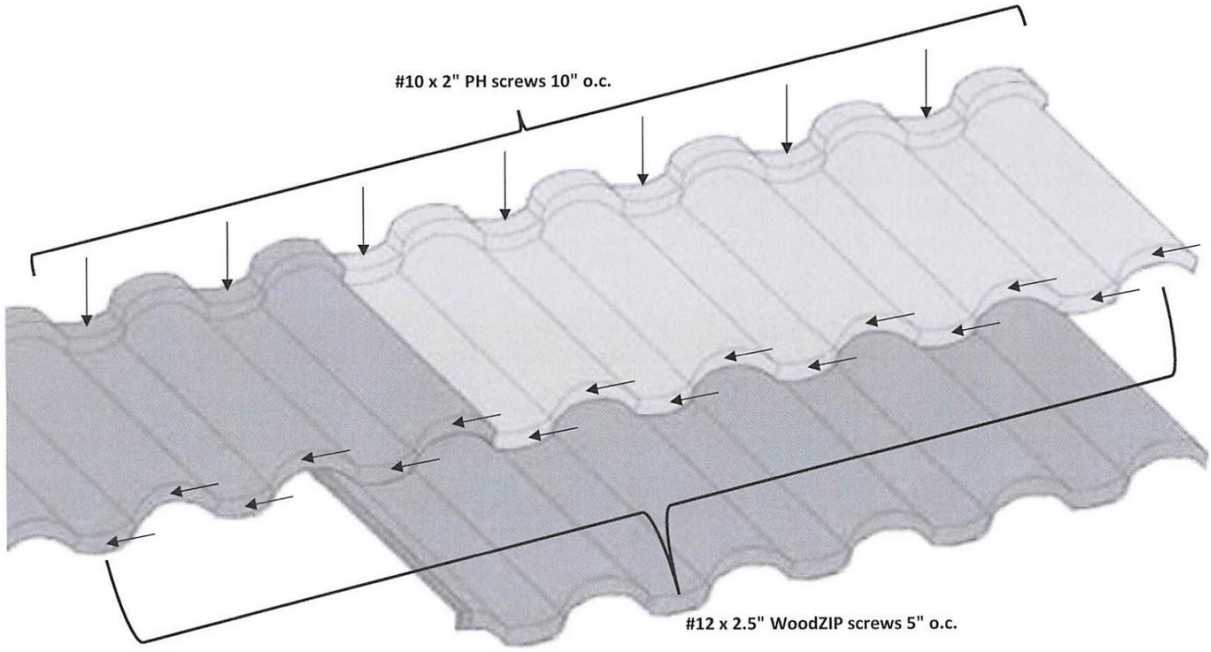


"15 screws per panel"



This evaluation report is provided for State of Florida product approval under Rule 61G20-3. The manufacturer shall notify CREEK Technical Services, LLC of any product changes or quality assurance changes throughout the duration for which this report is valid. This evaluation report does not express nor imply warranty, installation, recommended use, or other product attributes that are not specifically addressed herein.

## NATURA ROMAN

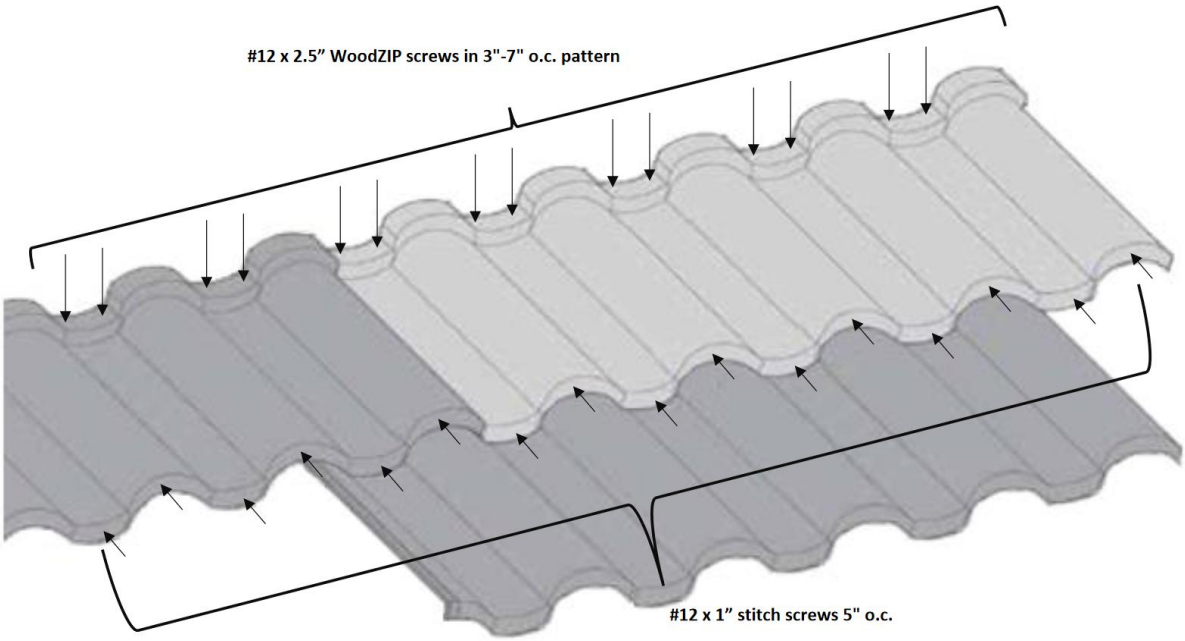


"20 screws per panel"

## NATURA SLATE

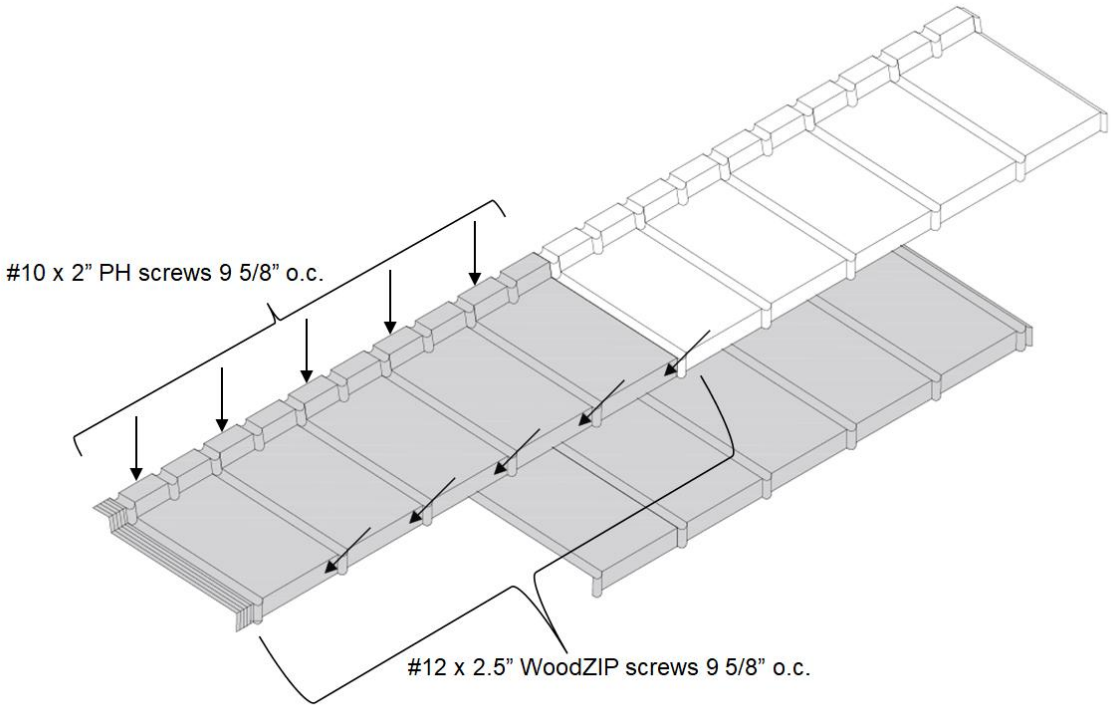


"10 screws per panel"



This evaluation report is provided for State of Florida product approval under Rule 61G20-3. The manufacturer shall notify CREEK Technical Services, LLC of any product changes or quality assurance changes throughout the duration for which this report is valid. This evaluation report does not express nor imply warranty, installation, recommended use, or other product attributes that are not specifically addressed herein.

## NATURA SLATE

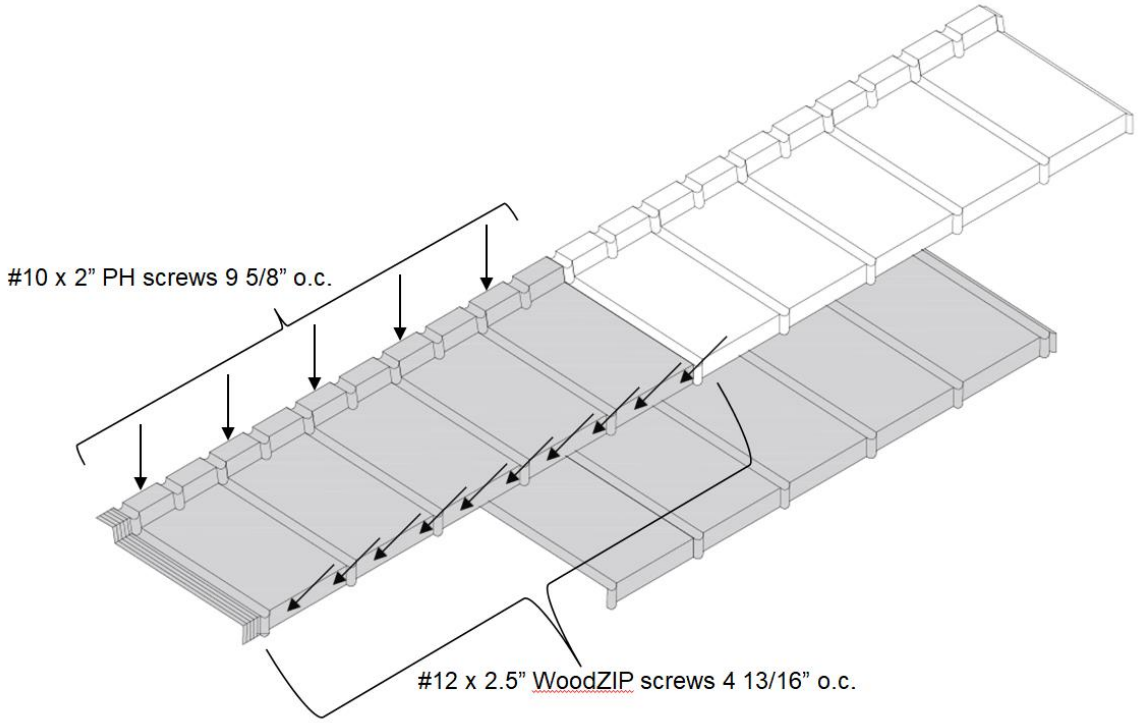


"15 screws per panel"

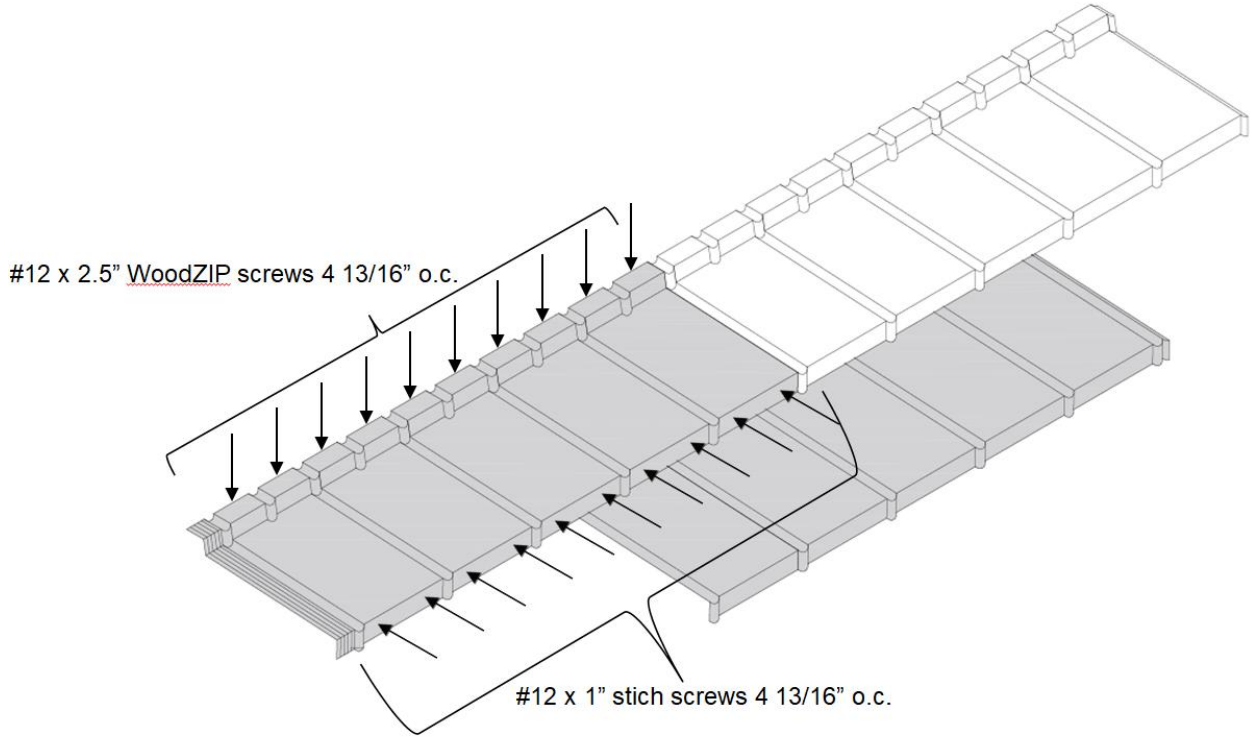


"20 screws per panel"



This evaluation report is provided for State of Florida product approval under Rule 61G20-3. The manufacturer shall notify CREEK Technical Services, LLC of any product changes or quality assurance changes throughout the duration for which this report is valid. This evaluation report does not express nor imply warranty, installation, recommended use, or other product attributes that are not specifically addressed herein.

## NATURA CLASSIC

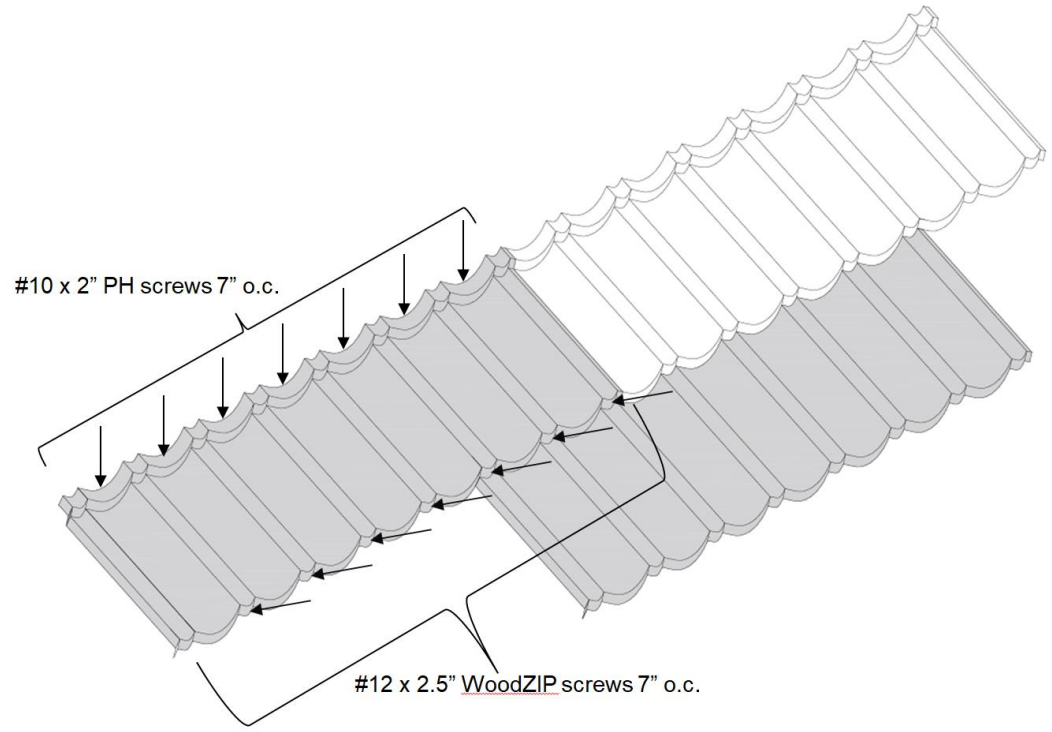


"14 screws per panel"

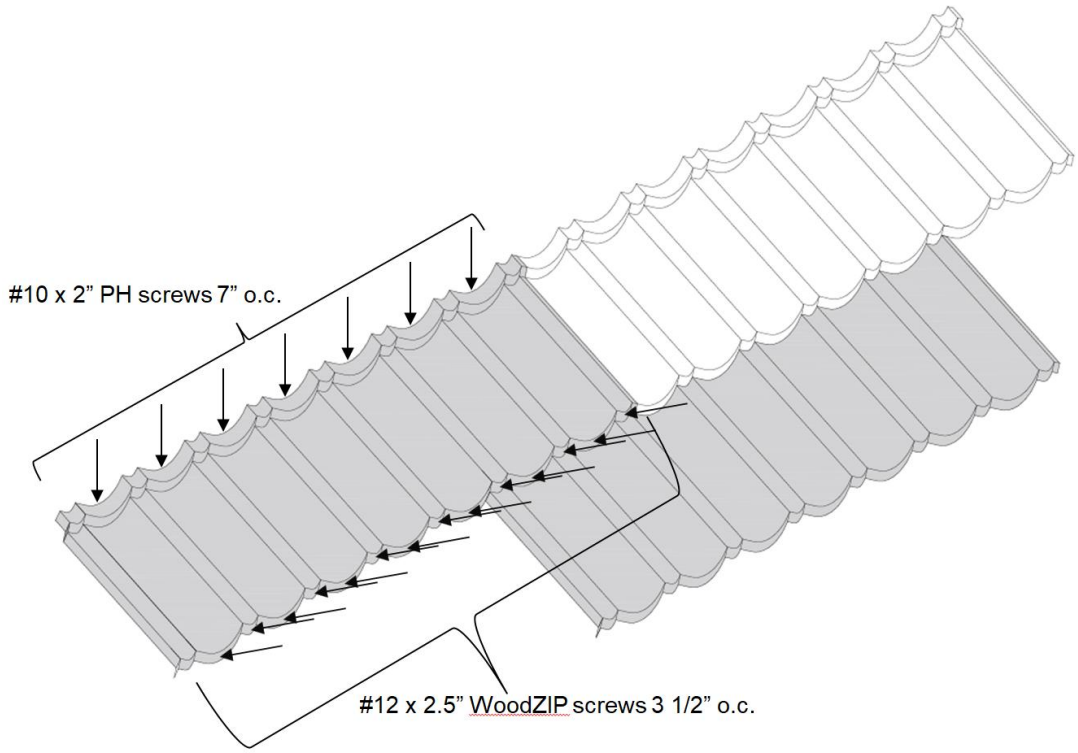


"21 screws per panel"



This evaluation report is provided for State of Florida product approval under Rule 61G20-3. The manufacturer shall notify CREEK Technical Services, LLC of any product changes or quality assurance changes throughout the duration for which this report is valid. This evaluation report does not express nor imply warranty, installation, recommended use, or other product attributes that are not specifically addressed herein.

## NATURA CLASSIC

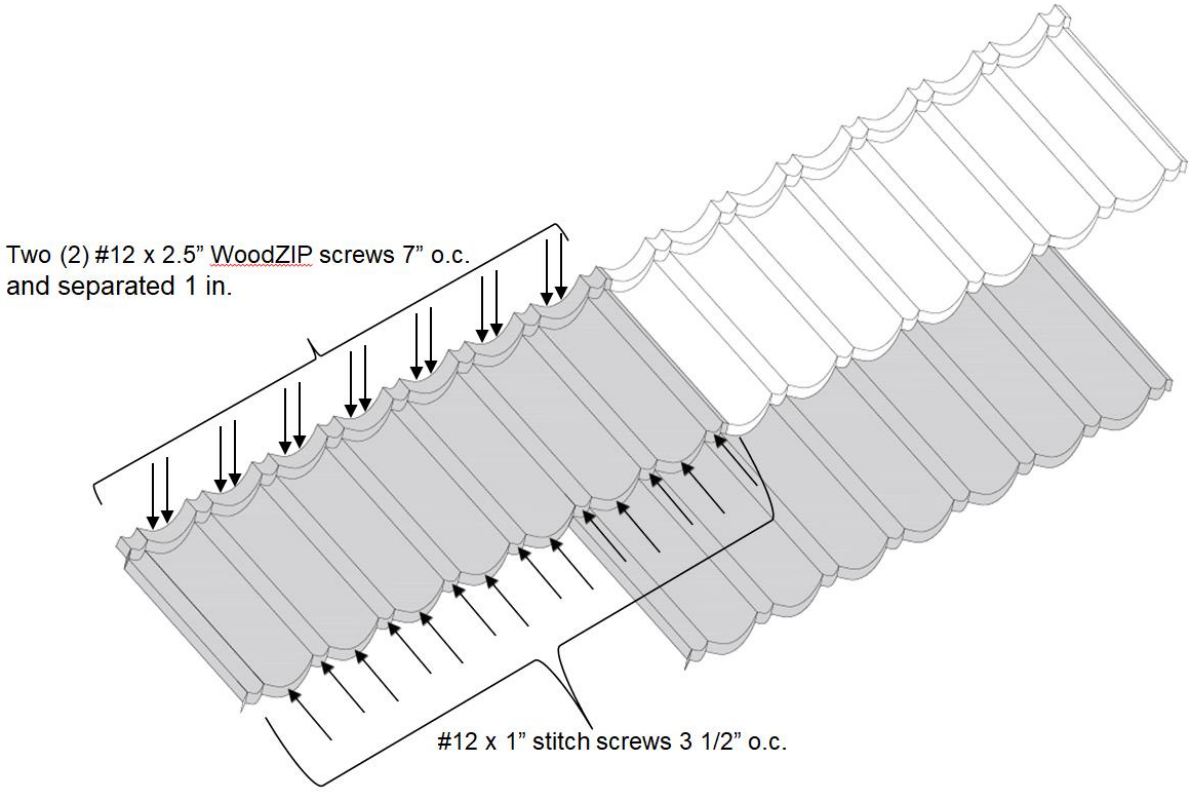


"28 screws per panel"

**END OF REPORT**



This evaluation report is provided for State of Florida product approval under Rule 61G20-3. The manufacturer shall notify CREEK Technical Services, LLC of any product changes or quality assurance changes throughout the duration for which this report is valid. This evaluation report does not express nor imply warranty, installation, recommended use, or other product attributes that are not specifically addressed herein.